APAC Infrastructure Pty Ltd
ABN: 43 615 637 235
1300 952 788
sales@apacinfrastructure.com.au

AP-TLT-AL340-WR8 Tripod Lattice Tower

Operating guide: setting up, raising and lowering. 8 m nominal, 2 AL340 aluminium sections on a galvanised steel tripod base, guyed at 1 level(s) to its own outriggers.

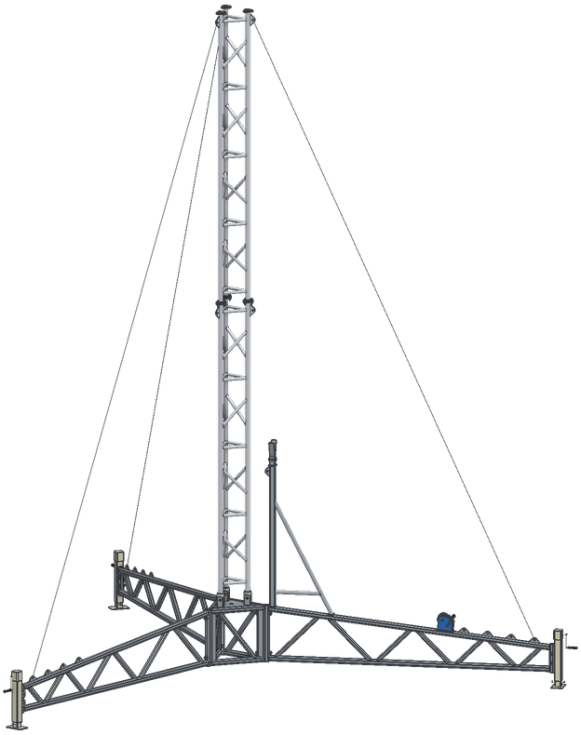

Standing

WARNING

DO NOT use this equipment unless you have been trained in its safe use and given permission. Raising and lowering need at least two competent people: one on the winch, one watching the tower, the guys and the fall zone.

WARNING

Look up and live. Never raise or lower within reach of overhead powerlines: the tower and its guys reach 10 m from the base. Never operate during a storm or when you can hear thunder.

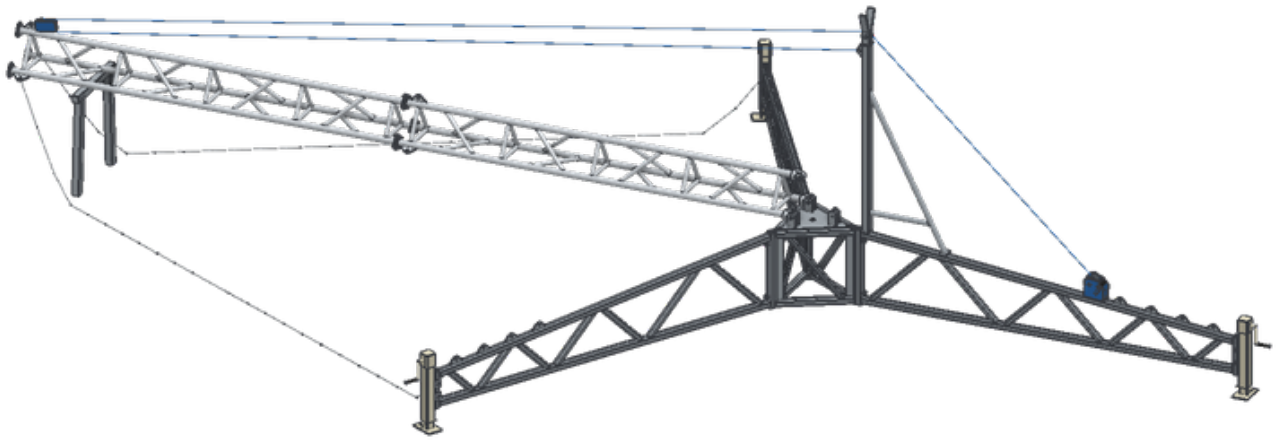

Lowered on its trestle, rigged for raising

APAC Infrastructure Pty Ltd
ABN: 43 615 637 235
1300 952 788
sales@apacinfrastructure.com.au

1. Safety

Personal protective equipment:



Hard hat at all times.



Enclosed safety footwear at all times.



Gloves when handling the winch rope and guy wires.



Climbing the tower needs a personal fall-arrest system, and qualified people only.

- Check the work area for slip and trip hazards, and the area above and around the tower for obstructions and electrical cables.
- Keep everyone out of the fall zone (a 10 m radius from the base, and especially the side the tower lowers to) while the tower is being raised or lowered, or is standing without all its guys.
- The ground must be firm and level enough for the jacks. If in doubt, have it inspected.
- Inspect guy wires, turnbuckles, shackles, the winch rope and all bolts for wear, damage or tampering before every raise and lower.
- Ballast or anchor the outrigger tips exactly as the site-specific engineering requires, before raising.



WARNING

Do not raise or lower the tower in wind gusting over 36 km/h (10 m/s). A tower part-way up is held only by its winch rope and two hinge pins: side wind on it and its payload loads the pins hard, and wind from behind can blow it up faster than the winch is wound.

2. Before you start: site-specific engineering

Every installation of this tower needs engineering for its site: the wind at the site (region, terrain, topography), the payload on the tower (antennas, headframe, cables: their sail area and weight) and the ground. That engineering sets:

- the ballast weight or anchor capacity at each outrigger tip, and how it is attached;
- the payload the tower may carry, and whether it may be fitted before raising;
- the guy pretension, if other than the standard 0.95 kN.

CAUTION

With a payload fitted, the tower can tip the whole tripod over the far pair of jacks as it leaves its trestle: the winch arm's tip (arm 1) lifts first. The ballast or anchors must be in place at all three tips before raising, even if the tower will be lowered again soon after.

Have on site: this guide, the site-specific engineering, a means of checking wind speed (a hand-held anemometer or a reliable forecast for the hour), and the tools listed in section 3.

APAC Infrastructure Pty Ltd
ABN: 43 615 637 235
1300 952 788
sales@apacinfrastructure.com.au

3. Kit contents and tools

The tower is pre-built and checked before dispatch, and each part is labelled for re-assembly: arms 1, 2 and 3 (arm 1 carries the winch and gin pole), and tower sections 1 (the base section, with the hinge feet) to 2.

Item	Qty
Tower base (galvanised steel, hinge tabs on top)	**1**
Outrigger trusses (arms 1-3; arm 1 with the winch)	**3**
Levelling jacks	**3**
AL340 base section (section 1, three hinge feet)	**1**
AL340 lattice sections (sections 2)	**1**
Gin pole	**1**
Hand winch with raising rope (fitted to arm 1)	**1**
Pulley block and two shackles	**1**
Trestle (tower support, lowered)	**1**
Guy wires with turnbuckles, labelled by arm and level	**3**
M16 x 150 bolts, nuts and washers (arms to base)	**6**
M12 stainless bolts, nuts and washers (section joints, 9 a joint)	**9**
M12 hinge pins (bolts), nuts and washers	**3**

Tools: spirit level; two 27 mm (M16) spanners or sockets for the arm bolts; two 18 mm (M12) for the section joints and two 18 mm (M12) for the hinge pins and jacks; a tape measure; gloves. Timber blocks or a vehicle jack with a timber pad help to hold the base while the arms are bolted on.

4. Set up the base

Step 1. Position the tower base and bolt on the arms

1. Place the tower base where the tower is to stand, with the face marked for lowering towards the clear side of the site: the tower lowers away from arm 1 and needs 6.6 m clear on that side.
2. Bolt each outrigger truss to its corner post of the base (2 x M16 each), matching the labels: arm 1 has the winch.
3. Tighten the M16 bolts snug tight (full effort of a person on a standard spanner).

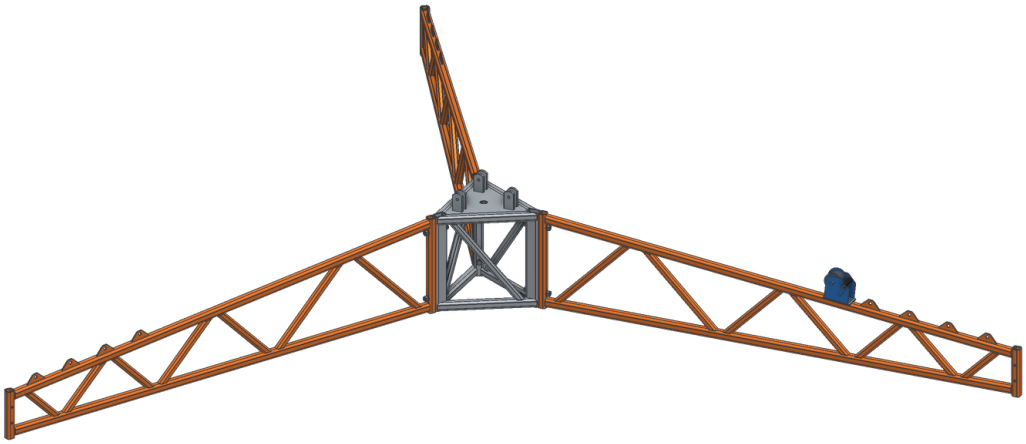

The three arms bolted to the tower base (arm 1, with the winch, to the right)

Step 2. Fit the jacks, level the base and fit the ballast or anchors

1. Bolt a jack to the tip of each outrigger (2 x M12 through the tabs).
2. Wind the jacks down until the base is level in both directions (check on the top plate with the spirit level) and every jack is bearing.
3. Fit the ballast or anchors at all three tips exactly as the site-specific engineering requires.



Jacks at the outrigger tips

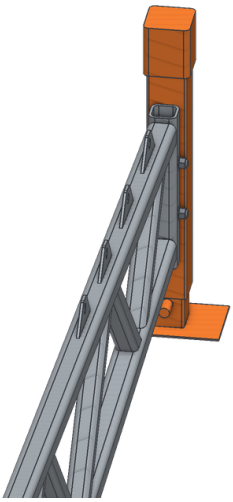

Jack at a tip

APAC Infrastructure Pty Ltd
ABN: 43 615 637 235
1300 952 788
sales@apacinfrastructure.com.au

5. Assemble the tower lying down

Step 3. Place the trestle

1. Stand the trestle on the lowering side, square to the tower's line, 600 mm in from where the tower's top will lie: the tower rests on it level, its two lower corners on the bar.

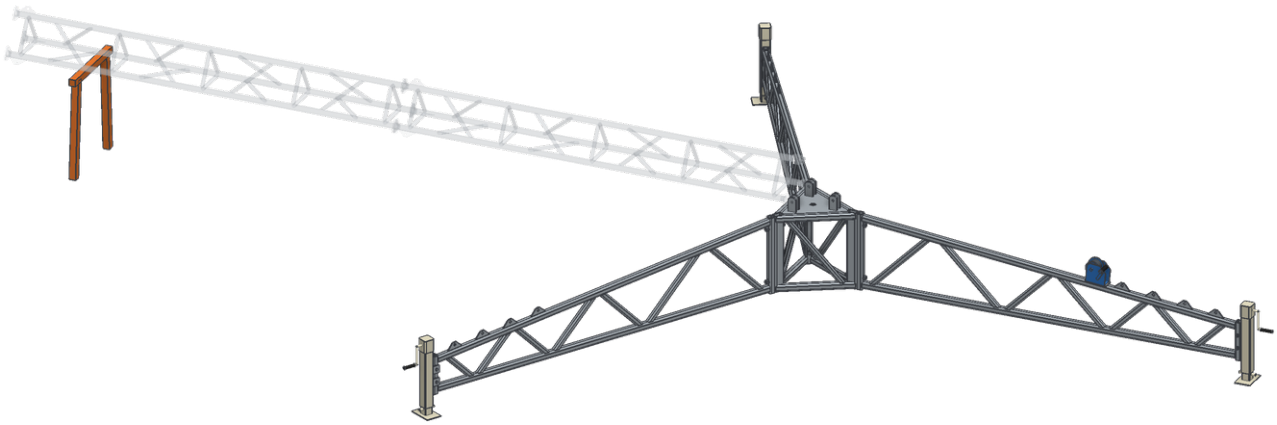

Trestle position (the tower shown faint, lowered)

Step 4. Fit the base section to the hinge

1. Lay the base section (section 1) towards the trestle with its two hinge feet over the two tab pairs on the lowering side of the base (pins 2 and 3), and its third foot (pin 1) towards arm 1.
2. Push an M12 hinge pin through each of the two tab pairs and feet, washer under the head and the nut, and run the nuts down snug: the feet must still turn on the pins.
3. Keep the third hinge pin (pin 1) with the kit: it goes in only when the tower is standing.
4. Lower the section onto the trestle.

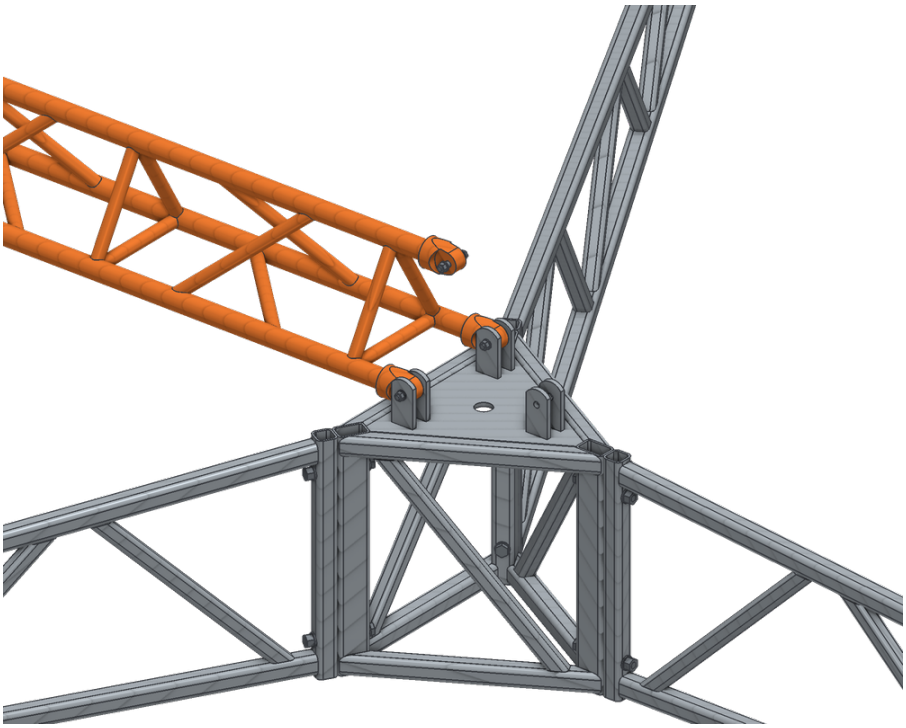

Base section on its two hinge pins (pin 1 out)

APAC Infrastructure Pty Ltd
ABN: 43 615 637 235
1300 952 788
sales@apacinfrastructure.com.au

Step 5. Bolt on the lattice sections

1. Bolt on sections 2 in order, matching the numbers stamped on the joint plates (lower number below, higher above) and the arm letters on the legs.
2. Nine M12 stainless bolts per joint (three per leg), heads on the upper section's plate, nuts below. Tighten snug.
3. Fit the headframe and payload now, if the site-specific engineering allows it to be raised with the tower.

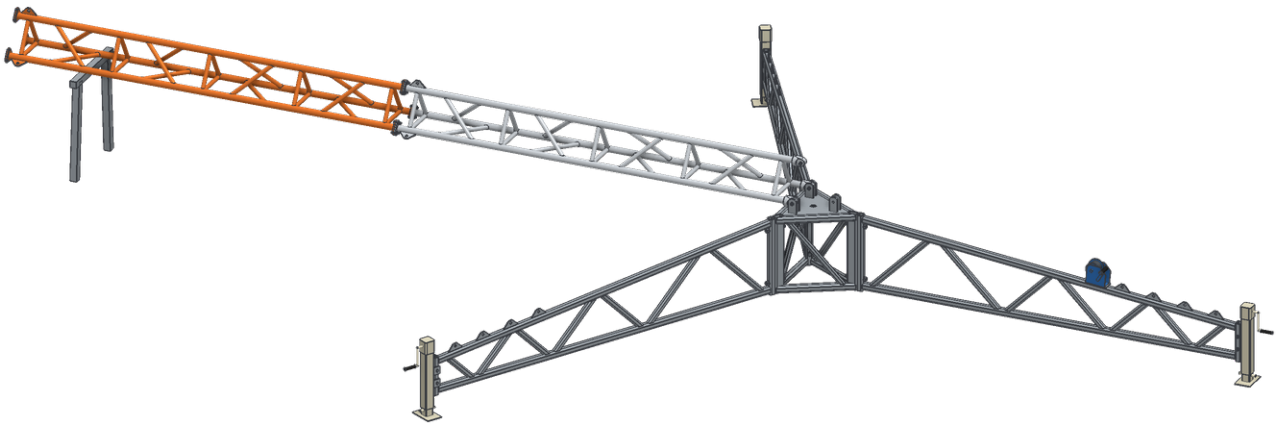

The sections bolted together on the trestle

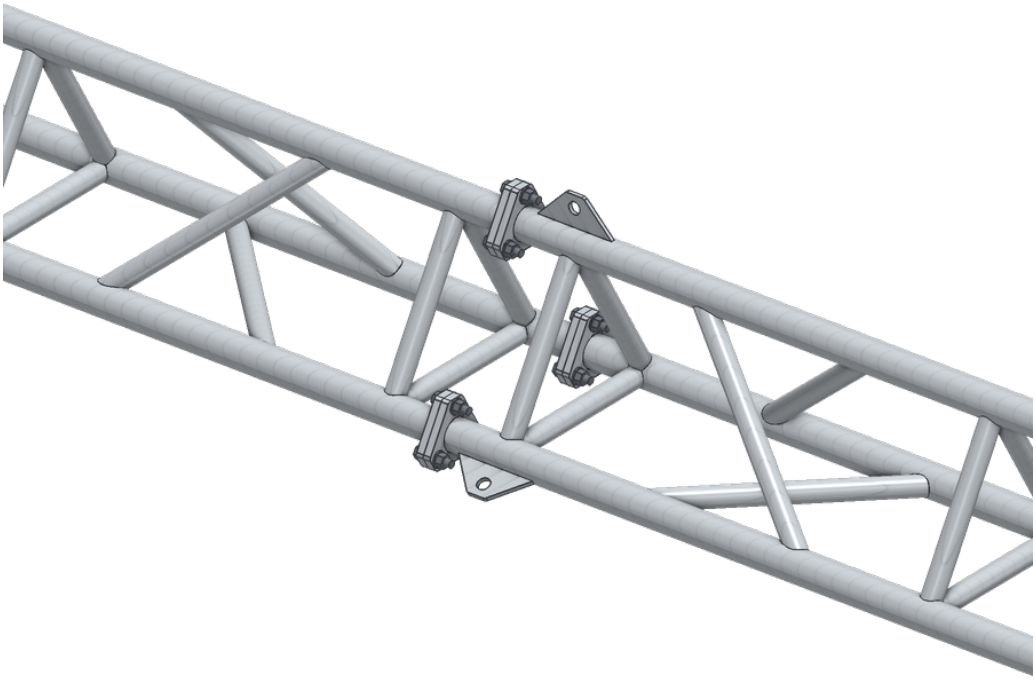

A section joint

APAC Infrastructure Pty Ltd
ABN: 43 615 637 235
1300 952 788
sales@apacinfrastructure.com.au

6. Rig for raising

Step 6. Check the gin pole and winch

1. The gin pole stands on arm 1, close to the base, its head in line with the tower. Check its bolts.
2. At its head: the wheel turns freely on its axle bolt, the V guide above it is straight and clear, and the cleat under the cap (the same as the tower's guy cleats) is undamaged.
3. Check the winch on arm 1: brake and ratchet working, rope undamaged, at least three turns left on the drum with the tower lowered.

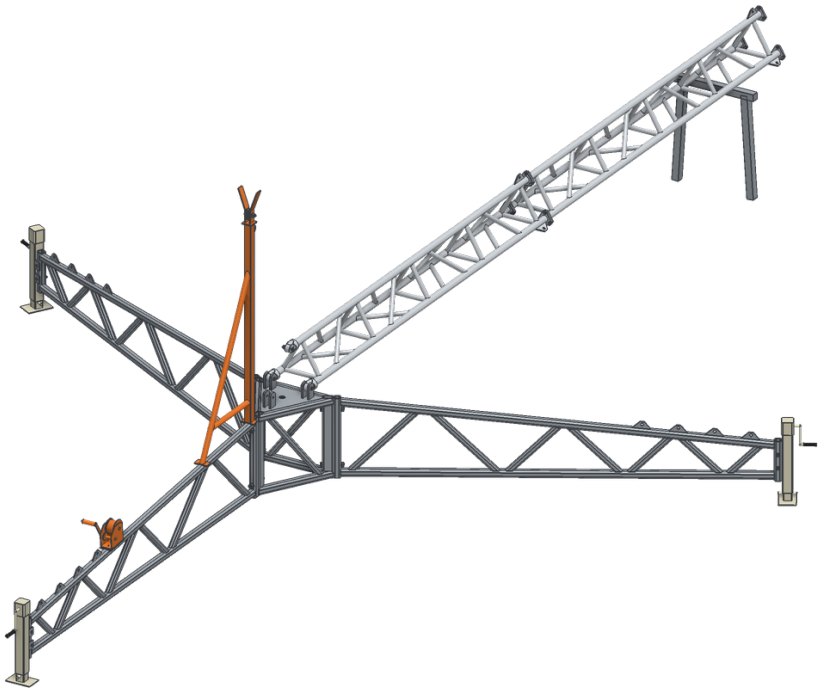

Gin pole and winch on arm 1

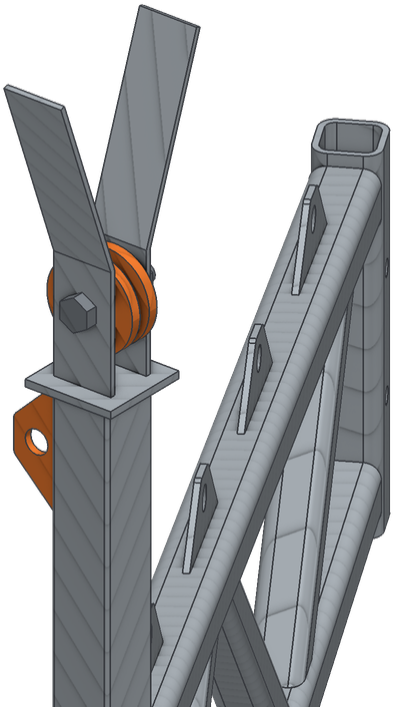

The head: V guide, wheel, and the cleat under the cap

Step 7. Fit the guys

1. Clip every guy to its tower cleat (each guy is labelled with its arm and level; the cleats are labelled to match). Check every gate has snapped shut.
2. Connect the arm 2 and arm 3 guys to their outrigger cleats, with their turnbuckles at the length marked for standing. Do not shorten them to tension them now.
3. Keep the arm 1 guys clipped to the tower and their free ends coiled clear of the winch and the tower's path. They are connected when the tower is standing.

CAUTION

The arm 2 and 3 guys are slack while the tower is down and come tight exactly when it stands upright: they stop it going past upright toward arm 1. If they are set too long, the tower overshoots; too short, the winch ends up pulling against them. Set them to their marked length every time.

APAC Infrastructure Pty Ltd
ABN: 43 615 637 235
1300 952 788
sales@apacinfrastructure.com.au

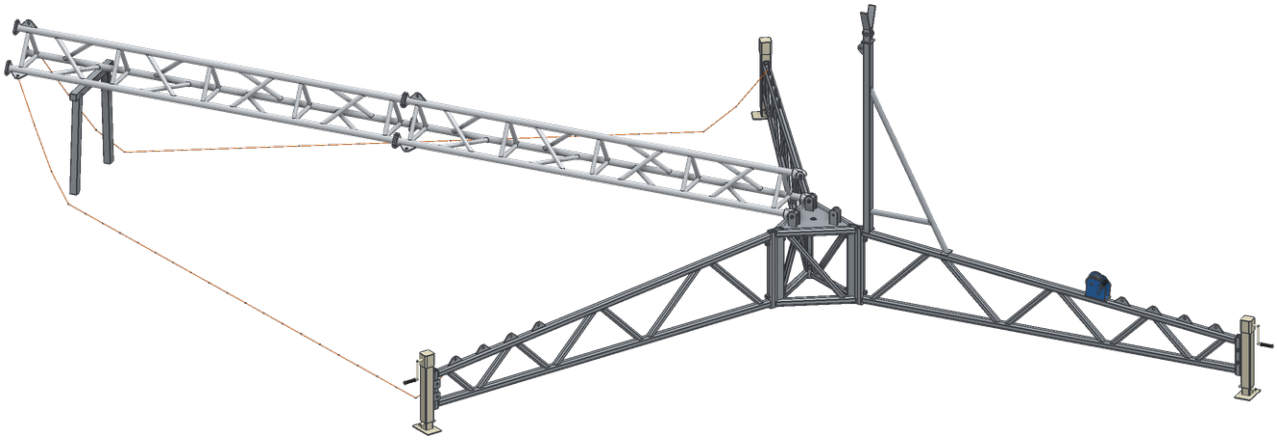

Arm 2 and 3 guys connected, slack (arm 1 guys not shown)

Step 8. Reeve the raising rope

1. Pay out rope from the winch and lead it up over the gin pole's wheel, between the V guide's arms, and along the tower to the pulley block.
2. Shackle the block to the top section's cleat on the arm 1 side (the upper side of the lying tower).
3. Pass the rope round the block's sheave and back to the gin pole, and shackle its end to the cleat under the gin pole's cap.
4. Check the rope is seated on the gin pole wheel and in the block's sheave, and is not twisted.

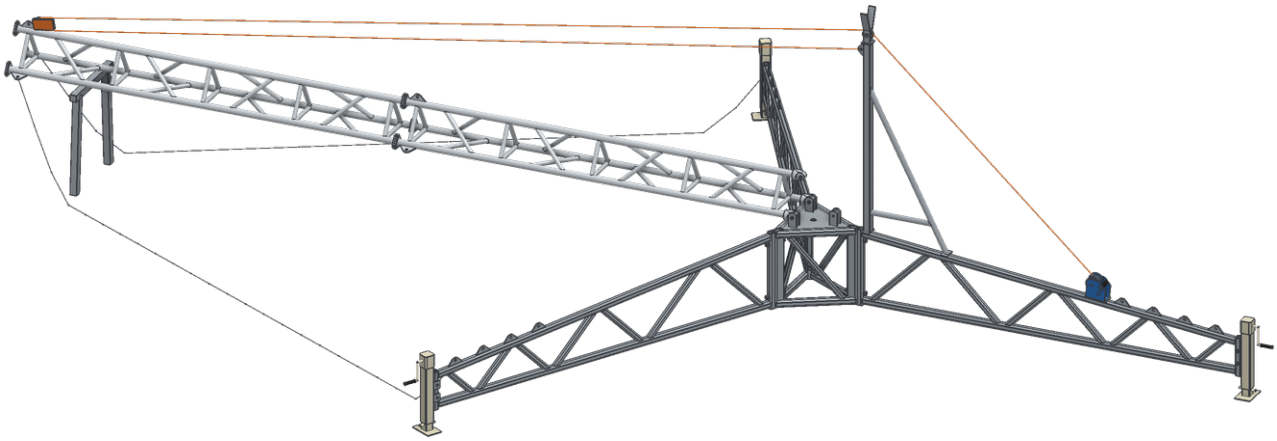

Rope reeved 2:1

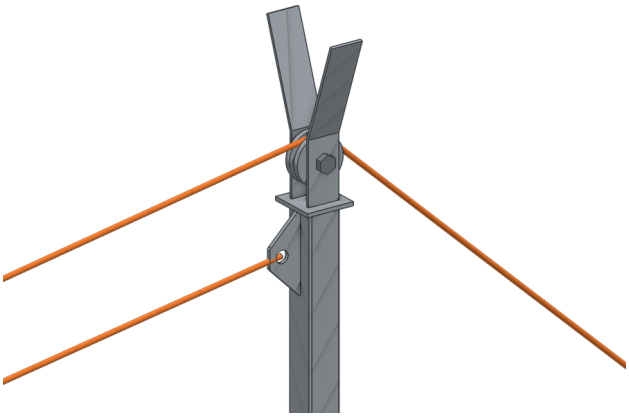

Over the wheel; the end shackled to the cleat

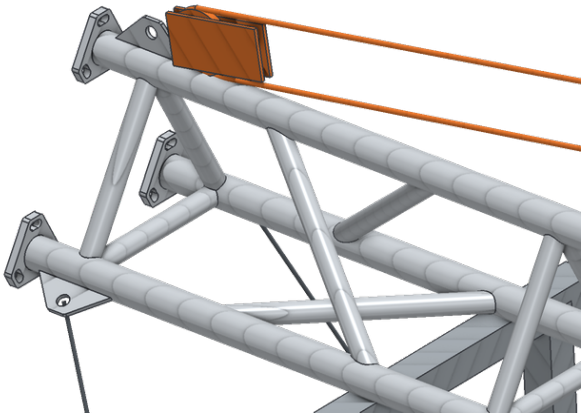

Block on the top section

APAC Infrastructure Pty Ltd
ABN: 43 615 637 235
1300 952 788
sales@apacinfrastructure.com.au

7. Raise the tower

Step 9. Pre-raise checks

1. Wind below 36 km/h in gusts, and forecast to stay there until the tower is standing and guyed.
2. Ballast or anchors fitted at all three tips as the site-specific engineering requires; all jacks bearing.
3. Hinge pins 2 and 3 in, nuts snug, feet free to turn; pin 1 out and at hand.
4. Section joints all bolted; payload fitted only if the engineering allows.
5. Arm 2 and 3 guys connected at their marked length; arm 1 guys coiled clear.
6. Rope reeved and seated; winch brake working.
7. Fall zone (10 m) clear of people, vehicles and powerlines.

Step 10. Winch the tower up

1. Wind the winch steadily. The pull is greatest as the tower leaves the trestle and falls away as it rises.
2. One person winds; the other watches the tower, the hinge feet, the guys and the outrigger tips. Stop at once if anything binds, a tip lifts or a jack loses its footing.
3. At about 55 degrees the rope lifts off the gin pole wheel and runs straight from the winch to the tower. This is normal: the tower is then high enough that the wheel is no longer needed.
4. Never leave the tower part-way up. If you must stop, keep the winch brake on and stay at the winch.

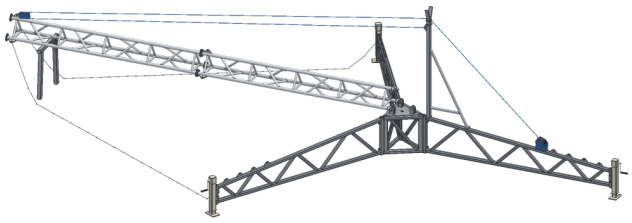

Leaving the trestle

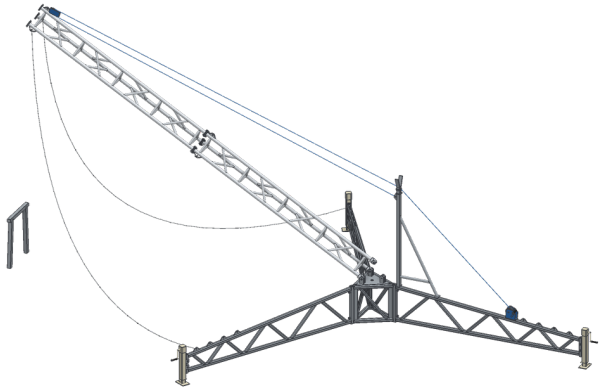

30 degrees

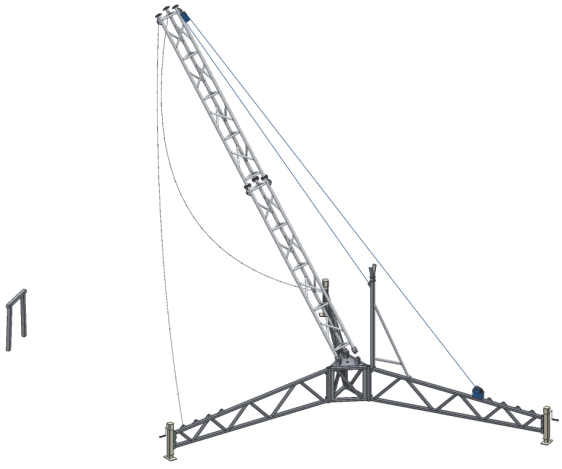

60 degrees

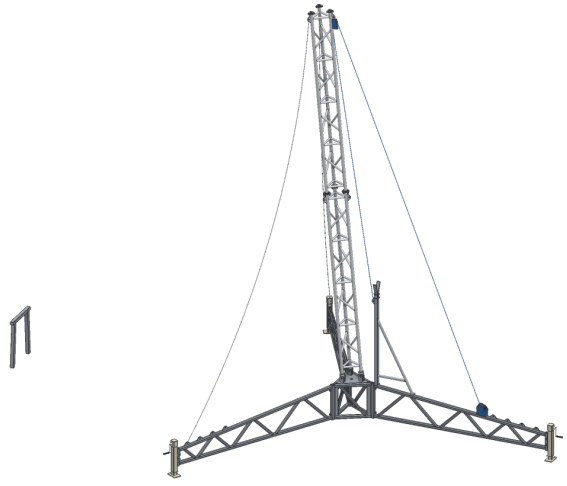

Nearly upright: the arm 2 and 3 guys coming tight

APAC Infrastructure Pty Ltd
ABN: 43 615 637 235
1300 952 788
sales@apacinfrastructure.com.au

Step 11. Stop at upright and lock the base

1. Slow down for the last few degrees. Stop winching as soon as the arm 2 and 3 guys come tight and the third foot sits between its tabs. Do not winch against the guys.
2. Insert hinge pin 1 through its tabs and foot, washer and nut, and run it down snug.
3. Keep the winch brake on.

WARNING

The winch pulls the tower through a 2:1 rope: winding on once the guys are tight overloads the guys, the rope and the gin pole.

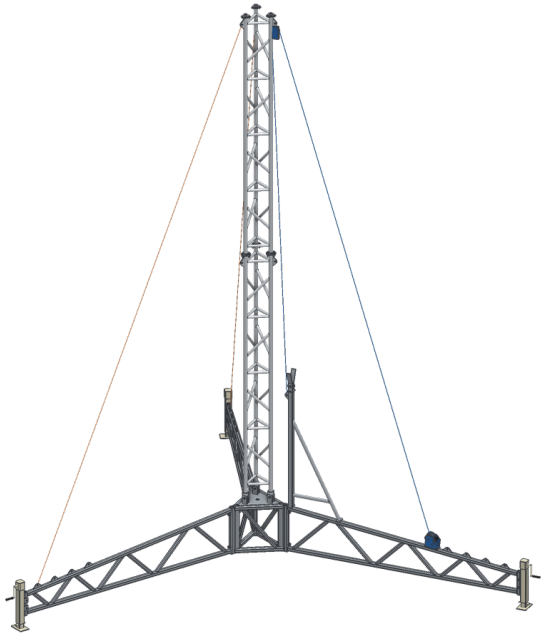

Upright: the arm 2 and 3 guys tight

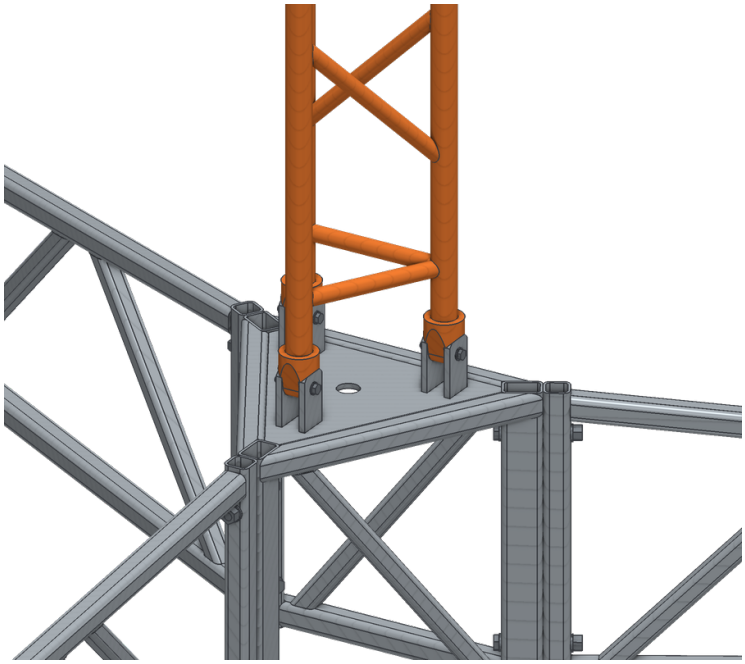

Pin 1 goes in now

Step 12. Connect the arm 1 guys and finish

1. Connect the arm 1 guys to their outrigger cleats.
2. Tension all guys with their turnbuckles to the pretension the engineering gives (0.95 kN standard), keeping the tower plumb: check it with the spirit level on two faces.
3. Tighten all three hinge pins and the section joint bolts snug tight. Lock the turnbuckles.
4. Ease the winch until the rope is just slack. For a short-term installation the rope and block may stay rigged; for longer, remove them, wind the rope onto the drum and store the block.

APAC Infrastructure Pty Ltd
ABN: 43 615 637 235
1300 952 788
sales@apacinfrastructure.com.au

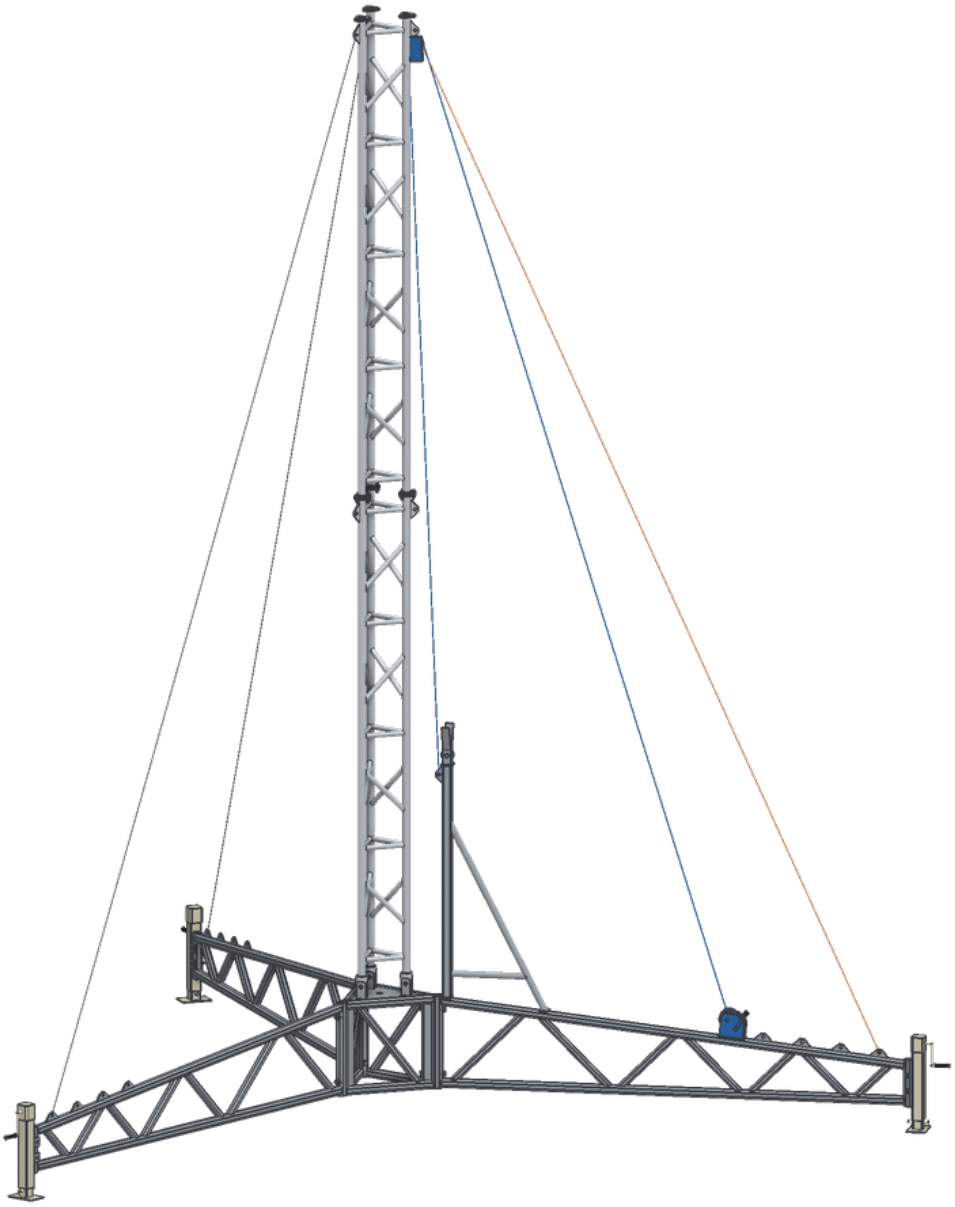

Standing with all guys connected

APAC Infrastructure Pty Ltd
ABN: 43 615 637 235
1300 952 788
sales@apacinfrastructure.com.au

8. Lower the tower

Step 13. Before lowering

1. Wind below 36 km/h in gusts; fall zone clear; ballast or anchors still in place.
2. Stand the trestle in its place on the lowering side.
3. Rig the rope and block as in step 8 if they were removed, and wind in until the rope is tight (do not pull the tower).

Step 14. Release the arm 1 side

1. Slacken the arm 1 guys' turnbuckles and disconnect them from the outrigger; coil them clear (they stay clipped to the tower).
2. Slacken the turnbuckles of the arm 2 and 3 guys back to their marked standing length if they were shortened, but leave them connected.
3. Remove hinge pin 1. Slacken the nuts of pins 2 and 3 to snug, so the feet turn.

> **CAUTION**
> With pin 1 out and the arm 1 guys off, the tower is held by the winch rope against the arm 2 and 3 guys. Keep the winch brake on.

Step 15. Winch the tower down

1. Pay out the winch steadily. The arm 2 and 3 guys go slack as the tower leans away from arm 1, and the rope takes its weight.
2. At about 55 degrees the rope comes back down onto the gin pole wheel, led in by the V guide. Stop and check it is seated on the wheel before lowering further.
3. Watch the tips and the hinge feet. The load on the rope grows as the tower comes down, and is greatest just before it reaches the trestle.
4. Set the tower down on the trestle, its lower corners on the bar, and let the rope go slack.

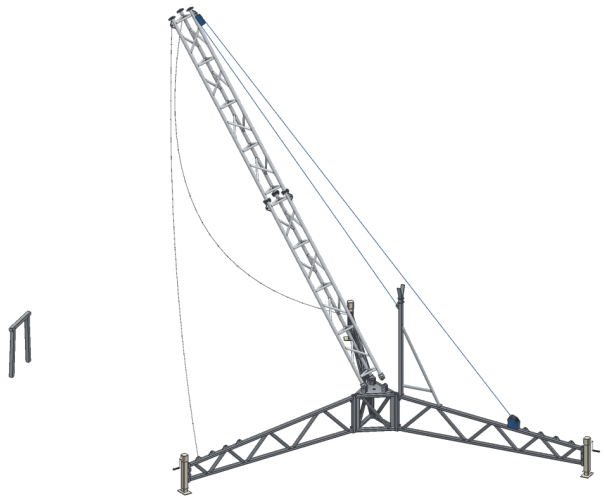

Lowering

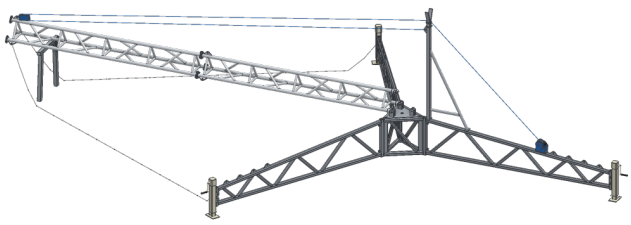

Down on the trestle

APAC Infrastructure Pty Ltd
ABN: 43 615 637 235
1300 952 788
sales@apacinfrastructure.com.au

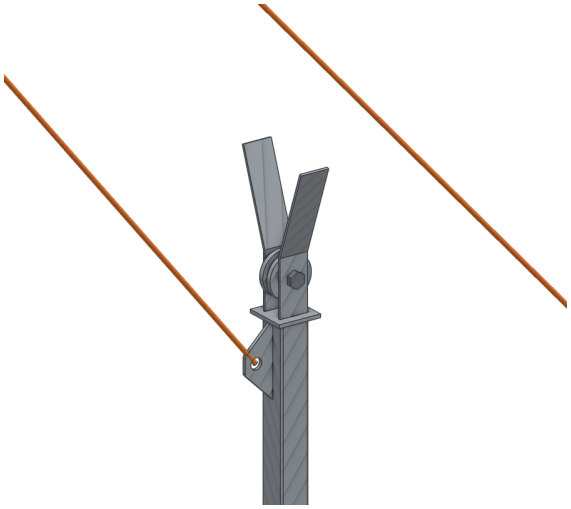

Above 55 degrees: the rope runs clear above the wheel

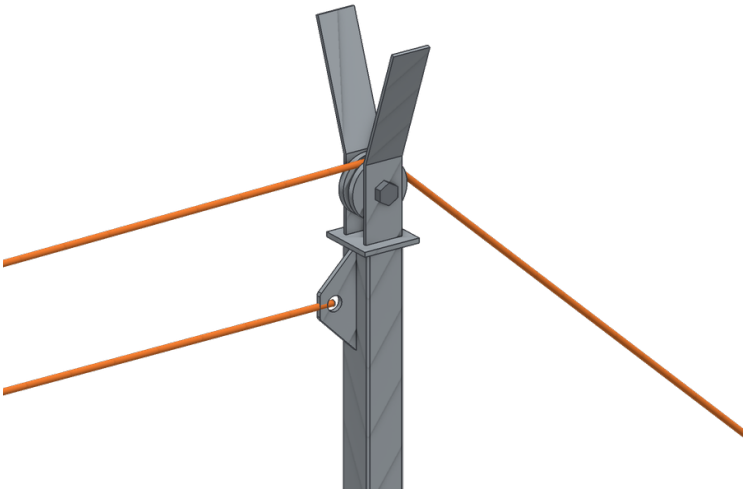

Below it: the rope back on the wheel, its end on the cleat

Step 16. Dismantling

1. To pack up, reverse steps 1 to 8: unrig the rope, disconnect the guys and label them, remove the payload, unbolt the sections from the top down, remove the base section from its hinge, then the jacks, the arms and the base.
2. Store the bolts with their labelled parts; replace any nyloc nut, damaged bolt or worn shackle.

9. Inspection and maintenance

- Before every raise and lower: guy wires (broken wires, kinks, corrosion), turnbuckles and their locking, shackles and carabiner gates, winch rope and brake, hinge pins and tabs, section joints.
- Every six months while standing, and after any severe storm: guy tension and tower plumb, ballast or anchors, all jacks bearing (the centre jack too, where fitted), bolts in place, cracks or dents in the aluminium sections (particularly at the welds) and corrosion on the steel base.
- Withdraw the tower from service until any damage is repaired to a design approved by a competent person.
- Remove the winch and store it if the tower stands for long periods.

Australian designed and manufactured infrastructure for public safety and first response, built on the Sunshine Coast, Queensland. Need a variation on this design? Our team can engineer it to suit your site.

Contact us

Phone 1300 952 788
Email sales@apacinfrastructure.com.au
Web apacinfrastructure.com.au
ABN 43 615 637 235

This guide covers setting up, raising and lowering only. Use it only with the site-specific engineering for this installation, which sets the ballast or anchors, the payload and the guy pretension.

Pictures are generated from the product model and may differ in detail from the tower supplied. Issued 23 November 2026 (DRAFT A).

© 2026 APAC Infrastructure Pty Ltd. All rights reserved.