APAC Infrastructure Pty Ltd
ABN: 43 615 637 235
1300 952 788
sales@apacinfrastructure.com.au

AL340 Hinged Base Plate to suit GSK3 Skid

AP-GSK3-HBP-AL340

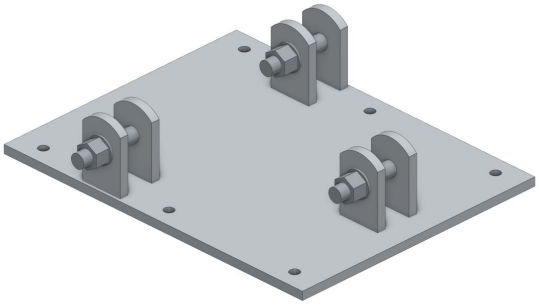

Key Features

- Hinge-down AL340 tower on the GSK3 skid
- Welded galvanised steel plate and hinge tabs
- Bolts through the skid's mast cross pieces
- Part of the AL340 Ecosystem

Overview

The AP-GSK3-HBP-AL340 mounts a hinge-down AL340 tower on the GSK3 galvanised steel skid. A 12 mm galvanised steel plate across the skid's two mast cross pieces carries three pairs of 12 mm hinge tabs that receive the lugs on the AL340 Heavy-Duty Base Module's feet (AP-AL340-BMHD), with three M20 hinge pins. Two pins form the hinge, so the tower raises and lowers in one plane with the gin pole and winch (AP-GSK3-GPW-AL340), and the third locks it upright.

Six M12 bolts through the cross pieces, supplied with the skid, hold it down. It is the tower mount of APAC's GSK3 skid kits with the 4, 7 and 10 m hinged AL340 towers.

APAC Infrastructure Pty Ltd
ABN: 43 615 637 235
1300 952 788
sales@apacinfrastructure.com.au

Specification

Parameter	AP-GSK3-HBP-AL340
Physical Specification	
System	**GSK3** **AL340**
Subtype	**Interface Bracket**
Materials	**Steel**
Material Finish	**Hot-Dip Galvanised**
Mounting	**Screw / Bolt**
Dimensions	**475 × 412 × 104 mm**
Weight	**19.3 kg**
Interfaces	
Installation / Attachment	**Quantity** | **Mounting** | **Notes** 6 | Screw / Bolt | Six M12 bolts through the GSK3's mast cross pieces (supplied with the skid)
Available Interfaces	**Quantity** | **Interfaces** | **Notes** 1 | AL340 Hinge Tab Pattern (M20) | For receiving the AL340 Heavy-Duty Base Module

Subcomponents

Quantity	Item	Materials	Material Finish
1	12 mm Plate Base with 12 mm Plate Hinge Tabs	Steel	Hot-Dip Galvanised

Quantity	Bundled Components
3	Hex Bolt, Hot-Dip Galvanised 8.8 - M20 x 100mm Standard Thread (AP-FST-HXB-HDM20-100)
3	Nylock Nut, Hot-Dip Galvanised Class 8 - M20 Standard Thread (AP-FST-NYN-HDM20)
3	Flat Washer, Hot-Dip Galvanised Class 8 - M20 (AP-FST-FW-HDM20)

Australian designed and manufactured infrastructure for public safety and first response, built on the Sunshine Coast, Queensland. Need a variation on this design? Our team can engineer it to suit your site.

Contact us

Phone	1300 952 788
Email	sales@apacinfrastructure.com.au
Web	apacinfrastructure.com.au
ABN	43 615 637 235

Specifications, dimensions and weights are nominal, correct at the date of issue and subject to change without notice. Images are for illustration and may show optional equipment. Confirm suitability for your site, including wind region and mounting surface, with APAC before ordering, and install in accordance with APAC's instructions and the relevant Australian Standards.

Issued 29 November 2026. For the latest version of this datasheet, visit https://apacinfrastructure.com.au/product-catalogue/base-plates-interfaces/al340-hinged-base-plate-suit-gsk3-skid?v=859

© 2026 APAC Infrastructure Pty Ltd. All rights reserved.