APAC Infrastructure Pty Ltd
ABN: 43 615 637 235
1300 952 788
sales@apacinfrastructure.com.au

AL340 Hinged Base Plate to suit DTP3 Platforms

AP-DTP3-HBP-AL340

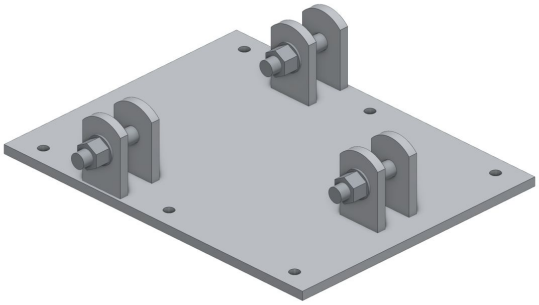

Key Features

- Hinge-down AL340 tower on a DTP3 skid or jackframe
- Fully welded stainless steel assembly
- One plate drilled for the DTP3SK and DTP3JF
- Part of the AL340 Ecosystem

Overview

The AP-DTP3-HBP-AL340 mounts a hinge-down AL340 tower on a DTP3 platform's mast seat, as the AP-AL340-HBP-S600 does on an S600 footing. A 12 mm stainless steel plate carries three pairs of 12 mm hinge tabs that receive the lugs on the AL340 Heavy-Duty Base Module's feet (AP-AL340-BMHD), with three M20 hinge pins. Two pins form the hinge, so the tower raises and lowers in one plane with the gin pole and winch (AP-DTP3-GPW-AL340), and the third locks it upright.

Its six holes match the mast seat of both DTP3 platforms, the AP-DTP3SK skid and the AP-DTP3JF jackframe, so a tower can move between them on its plate. The M12 bolt-downs come with the platform. It is the tower mount of APAC's DTP3 skid kits with the 4, 7 and 10 m hinged AL340 towers.

APAC Infrastructure Pty Ltd
ABN: 43 615 637 235
1300 952 788
sales@apacinfrastructure.com.au

Specification

Parameter	AP-DTP3-HBP-AL340
Physical Specification	
System	**DTP3** **AL340**
Subtype	**Interface Bracket**
Materials	**Stainless Steel 304**
Mounting	**Screw / Bolt**
Dimensions	**475 × 412 × 104 mm**
Weight	**19.4 kg**
Interfaces	
Installation / Attachment	
Available Interfaces	

Installation / Attachment

Quantity	Mounting	Notes
6	Screw / Bolt	On a DTP3 mast seat: six M12 bolts through its six Ø14 holes, on the DTP3SK skid or the DTP3JF jackframe (the bolts come with the platform)

Available Interfaces

Quantity	Interfaces	Notes
1	AL340 Hinge Tab Pattern (M20)	For receiving the AL340 Heavy-Duty Base Module

Subcomponents

Quantity	Item	Materials	Material Finish
1	12 mm Plate Base with 12 mm Plate Hinge Tabs	Stainless Steel 304	Mill Finish

Quantity	Bundled Components
3	Hex Bolt, Stainless Steel - M20 x 100mm Standard Thread (AP-FSS-HXB-M20-100)
3	Nylock Nut, Stainless Steel - M20 Standard Thread (AP-FSS-NYN-M20)
3	Flat Washer, Stainless Steel - M20 (AP-FSS-FW-M20)

Australian designed and manufactured infrastructure for public safety and first response, built on the Sunshine Coast, Queensland. Need a variation on this design? Our team can engineer it to suit your site.

Contact us

Phone	1300 952 788
Email	sales@apacinfrastructure.com.au
Web	apacinfrastructure.com.au
ABN	43 615 637 235

Specifications, dimensions and weights are nominal, correct at the date of issue and subject to change without notice. Images are for illustration and may show optional equipment. Confirm suitability for your site, including wind region and mounting surface, with APAC before ordering, and install in accordance with APAC's instructions and the relevant Australian Standards.

Issued 29 November 2026. For the latest version of this datasheet, visit https://apacinfrastructure.com.au/product-catalogue/base-plates-interfaces/al340-hinged-base-plate-suit-dtp3-platforms?v=858

© 2026 APAC Infrastructure Pty Ltd. All rights reserved.