APAC Infrastructure Pty Ltd
ABN: 43 615 637 235
1300 952 788
sales@apacinfrastructure.com.au

AL5 Solar Power System, 2400 W, 2 x 5.12 kWh LiFePO4, 5 kVA Inverter

AP-SPS-AL5-2400-2B-AC

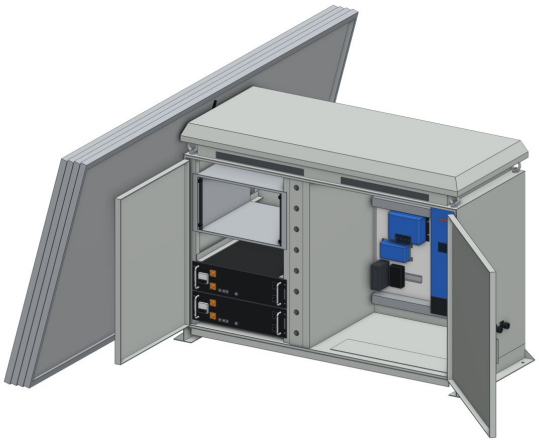

Key Features

- 2400 W solar: 4 x AIKO 600 W panels
- 10.24 to 20.48 kWh LiFePO4 battery (2 to 4 ZYC Simpo 5000 modules)
- Optional Victron MultiPlus-II 5 kVA inverter-charger with an internal 230 VAC double GPO
- Four 48 VDC circuits and four IP67 PoE++ Ethernet ports
- Remote monitoring through Victron VRM

Overview

APAC's 2400 W AL5 Solar Power System is a complete off-grid power system for remote sites, built into a Wescor AL5 aluminium cabinet (IP55): 4 AIKO 600 W solar panels (2400 W at STC), a Victron SmartSolar MPPT 150/45 charge controller and two to four ZYC Simpo 5000 lithium iron phosphate (LiFePO4) battery modules of 5.12 kWh each. A Victron Cerbo GX monitors and manages the system remotely through Victron's VRM portal.

Choose it with a Victron MultiPlus-II 48/5000 inverter-charger, for 230 VAC power at an internal double GPO (4000 W continuous) and charging from a generator or mains power, or as a DC-only system. Every system has four 48 VDC equipment circuits and a Weidmüller Gigabit PoE switch, powered by a Victron Orion-Tr isolated converter, with four IP67 RJ45 connectors on the outside of the cabinet.

The panels mount on an APAC solar frame chosen to suit the platform, sold separately. The cabinet's top bay is left free for the customer's equipment in a 4RU shock-mount rack; a 6RU shock-mount rack can be fitted instead, which limits the battery to three modules.

APAC Infrastructure Pty Ltd
ABN: 43 615 637 235
1300 952 788
sales@apacinfrastructure.com.au

Specification

Parameter	AP-SPS-AL5-2400-2B-AC
Physical Specifications	
Subtype	**Off-Grid Solar Power System**
Mounting	**Anchor Bolts**
Ingress Protection Rating	**IP55**
Min. Operating Temperature	**-20 °C**
Max. Operating Temperature	**50 °C**
Dimensions	**1,500 × 617 × 1,020 mm**
Weight	**345 kg**
Battery Specifications	
Battery	**Battery Type**: LiFePO4; **Battery Voltage**: 51.2 Vdc; **Battery Energy**: 10240 Wh; **Cycle Life**: 8000 cycles
Max. Expanded Capacity	**20480 Wh**
Min. Charging Temperature	**-10 °C**
Max. Charging Temperature	**55 °C**

APAC Infrastructure Pty Ltd
ABN: 43 615 637 235
1300 952 788
sales@apacinfrastructure.com.au

Power Specifications

Inverter

Continuous Power	Surge Power	Waveform	Output Frequency
4000 W	9000 W	Pure Sine Wave	50 Hz

Power Ports

Direction	Connector	Voltage Type	Max. Voltage	Max. Current	Max. Power	Charge Sources	Notes	Nominal Voltages	Min. Voltage	Quar
Input	MC4	DC	150 V	50 A	2600 W	Solar	Solar: Victron SmartSolar MPPT 150/45, 45 A charge; max. current is the PV short-circuit limit			
Input		AC	265 V	50 A		Generator, Mains	Generator or mains through the inverter's transfer switch; charges at up to 70 A	230 Vac	187 V	
Output	IEC Type I (AU Plug)	AC			4000 W		Internal double GPO inside the cabinet (no external AC outlet), pure sine: 4000 W continuous at 25 °C, 3700 W at 40 °C	230 Vac		2
Output		DC	58.08 V	16 A			Equipment circuits from the battery, breakers sized to the equipment (typically 16 A)	48 Vdc	40.8 V	4
Output	RJ45, IP67 Sealed	DC			60 W		Gigabit PoE (IEEE 802.3af/at/bt), 144 W in all, through IP67 connectors on the cabinet			4

Remote Monitoring

Yes

APAC Infrastructure Pty Ltd
ABN: 43 615 637 235
1300 952 788
sales@apacinfrastructure.com.au

Solar Specifications

Solar Array

PV Module	No. Modules	Module Power (STC)	Array Power (STC)	Configuration
AIKO-A600-MAH72Dw	4	600 W	2400 W	2S2P

Subcomponents

Quantity	Bundled Components
1	Wescor AL5 Solar Battery & Equipment Cabinet, 1020H x 1400W x 585D, Aluminium, IP55 (WESCOR-AL5)

Quantity	Item
1	Victron MultiPlus-II 48/5000/70-50 230V inverter-charger
1	Victron Cerbo GX system monitor (VRM remote monitoring)
2	ZYC Simpo 5000 51.2 V 100 Ah (5.12 kWh) LiFePO4 battery module
1	Victron SmartSolar MPPT 150/45 solar charge controller
1	Victron Orion-Tr 48/48-6 isolated DC-DC converter (280 W)
1	Weidmüller IE-SW-BLB-05-1GT-4GTPOE Gigabit PoE++ switch (4 PoE ports, 144 W)
4	Amphenol RDP-5SPFFH-TCU7001 IP67 RJ45 panel-mount coupler, cabinet wall
4	Amphenol RDP-00BMMS-TLM7001 IP67 RJ45 cable plug, mates with the coupler
1	EDUP DC-DC PoE injector for Starlink
4	AIKO Comet 2N+ AIKO-A600-MAH72Dw 600 W PV module, 2323 x 1134 mm

APAC Infrastructure Pty Ltd
ABN: 43 615 637 235
1300 952 788
sales@apacinfrastructure.com.au

Views

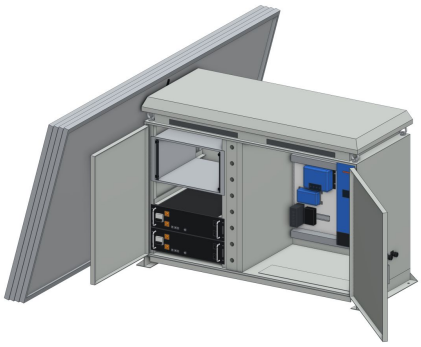

Isometric

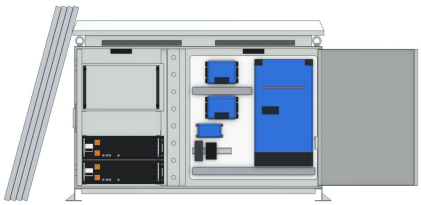

Front

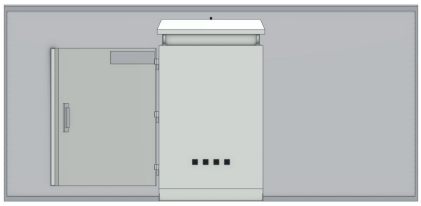

Side

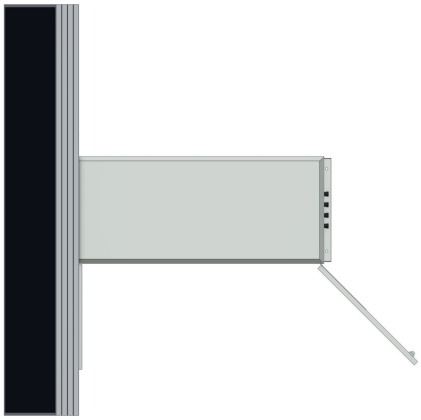

Top

Variants

	AL5 Solar Power System, 2400 W, 2 x 5.12 kWh LiFePO4, 5 kVA Inverter AP-SPS-AL5-2400-2B-AC · this datasheet
	AL5 Solar Power System, 2400 W, 3 x 5.12 kWh LiFePO4, 5 kVA Inverter AP-SPS-AL5-2400-3B-AC
	AL5 Solar Power System, 2400 W, 4 x 5.12 kWh LiFePO4, 5 kVA Inverter AP-SPS-AL5-2400-4B-AC
	AL5 Solar Power System, 2400 W, 2 x 5.12 kWh LiFePO4, DC Only AP-SPS-AL5-2400-2B-DC
	AL5 Solar Power System, 2400 W, 3 x 5.12 kWh LiFePO4, DC Only AP-SPS-AL5-2400-3B-DC
	AL5 Solar Power System, 2400 W, 4 x 5.12 kWh LiFePO4, DC Only AP-SPS-AL5-2400-4B-DC

Australian designed and manufactured infrastructure for public safety and first response, built on the Sunshine Coast, Queensland. Need a variation on this design? Our team can engineer it to suit your site.

Contact us

Phone 1300 952 788
Email sales@apacinfrastructure.com.au
Web apacinfrastructure.com.au
ABN 43 615 637 235

Specifications, dimensions and weights are nominal, correct at the date of issue and subject to change without notice. Images are for illustration and may show optional equipment. Confirm suitability for your site, including wind region and mounting surface, with APAC before ordering, and install in accordance with APAC's instructions and the relevant Australian Standards.

Issued 25 November 2026. For the latest version of this datasheet, visit https://apacinfrastructure.com.au/product-catalogue/power-systems/al5-solar-power-system-2400-w?v=822

© 2026 APAC Infrastructure Pty Ltd. All rights reserved.