APAC Infrastructure Pty Ltd
ABN: 43 615 637 235
1300 952 788
sales@apacinfrastructure.com.au

Nylock Nut, Stainless Steel - M12 Standard Thread

AP-FSS-NYN-M12

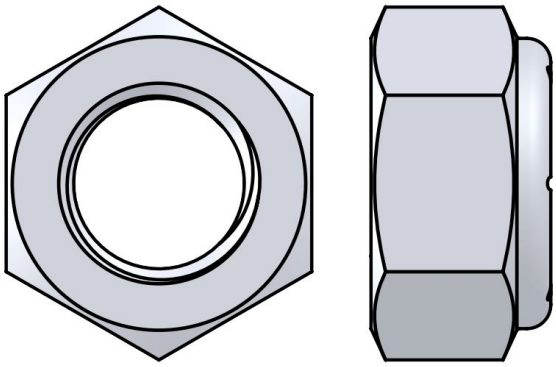

Overview

Stainless steel M12 nylon insert lock nut with a standard coarse thread. Typically found as a subcomponent within APAC guy wire kits.

APAC Infrastructure Pty Ltd
ABN: 43 615 637 235
1300 952 788
sales@apacinfrastructure.com.au

Specification

Parameter	AP-FSS-NYN-M12
Physical Specifications	
Subtype	**Nylock Nuts**
Size	**M12**
Materials	**Stainless Steel 304**
Material Finish	**Mill Finish**

Variants

Nylock Nut, Stainless Steel - M12 Standard Thread AP-FSS-NYN-M12 · this datasheet	
Nylock Nut, Stainless Steel - M10 Standard Thread AP-FSS-NYN-M10	
Nylock Nut, Stainless Steel - M8 Standard Thread AP-FSS-NYN-M8	
Nylock Nut, Stainless Steel - M16 Standard Thread AP-FSS-NYN-M16	
Nylock Nut, Stainless Steel - M20 Standard Thread AP-FSS-NYN-M20	
Nylock Nut, Stainless Steel - M24 Standard Thread AP-FSS-NYN-M24	

Australian designed and manufactured infrastructure for public safety and first response, built on the Sunshine Coast, Queensland. Need a variation on this design? Our team can engineer it to suit your site.

Contact us

Phone	1300 952 788
Email	sales@apacinfrastructure.com.au
Web	apacinfrastructure.com.au
ABN	43 615 637 235

Specifications, dimensions and weights are nominal, correct at the date of issue and subject to change without notice. Images are for illustration and may show optional equipment. Confirm suitability for your site, including wind region and mounting surface, with APAC before ordering, and install in accordance with APAC's instructions and the relevant Australian Standards.

Issued 25 November 2026. For the latest version of this datasheet, visit https://apacinfrastructure.com.au/product-catalogue/fixings/nylock-nut-stainless-steel?v=635

© 2026 APAC Infrastructure Pty Ltd. All rights reserved.