APAC Infrastructure Pty Ltd
ABN: 43 615 637 235
1300 952 788
sales@apacinfrastructure.com.au

AMT Single-Axle Alloy Modular Trailer, 2-Panel Solar, 8m Electric Winch Mast with Rotator

AP-AMT-SA-2PS8MR

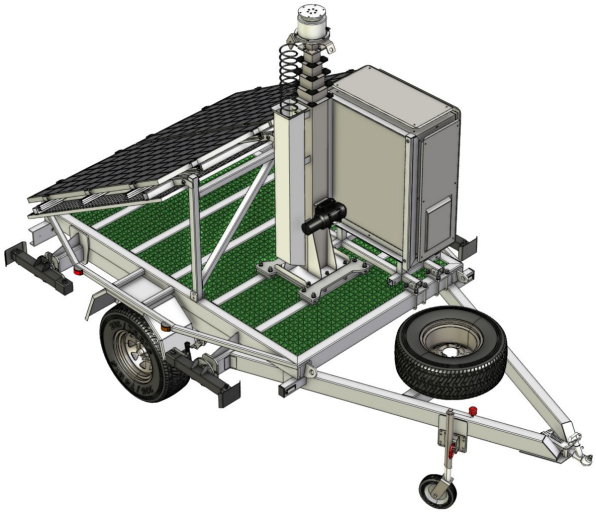

Key Features

- 8 metre electric cable-driven mast with payload rotator
- Structural-Grade Aluminium trailer construction
- Choice of solar & enclosures
- Alloy Modular Technologies (AMT) ecosystem

Overview

Our Single-Axle Alloy Trailer is part of the company's AMT Platform, a mounting ecosystem built from interchangeable modules that allows simple reconfiguration and redeployment.

This trailer configuration comprises a Single-Axle base chassis, providing a deck length of 2.6 m and width of 1.6 metres, 8 metre electric winch-up mast, fixed two-panel solar system, and equipment enclosure.

We provide the AMT with a range of electronics options depending on whether your team plan to do the fit-out or ours. The most common configuration is a 610 W Victron solar power system, 200 Ah lithium batteries, mast rotator controller, all pre-wired into a 1000x800x400 enclosure (steel or stainless steel, your choice).

The trailer is fitted with a 5-section cable-driven winch-up mast that achieves an extended height of 7.8 metres and packs down to 1.8 metres. The mast has been engineered for a 50 kg payload in up to 120 km/h winds. The DC-powered payload rotator allows equipment to be rotated a full 360 degrees, and is steered using a controller in the cabinet (can be wired for remote control on request).

APAC Infrastructure Pty Ltd
ABN: 43 615 637 235
1300 952 788
sales@apacinfrastructure.com.au

Specification

Parameter	AP-AMT-SA-2PS8MR
Physical Specifications	
No. Axles	**1**
Running Clearance	**600 mm**
Deck Height	**850 mm**
Materials	**Aluminium**
Material Finish	**Bright/Pickled Finish**
Outriggers	**1500 kg Levelling Jacks**
Braking System	**Mechanical Brakes**
Trailer Connector	**7-Pin Flat**
Trailer Coupling	**50 mm Ball Hitch**
Suspension	**Leaf Spring**
Weight	**750 kg**
Dimensions	**4,500 × 2,500 × 2,670 mm**
Interfaces	
Available Interfaces	

Quantity	Interfaces	Notes
1	RM-Series Rotator Bolt Pattern	For attaching equipment to mast rotator

Subcomponents

Quantity	Bundled Components
1	AMT Single-Axle Alloy Modular Trailer, Base Chassis (AP-AMT-SA)
1	Electric Winch-Up Retractable Mast with Payload Rotator - 1.8m Retracted, 7.8m Extended, 50kg Payload (AP-RM-CWU8E-6S-1CR)
1	Payload Rotator for APAC RM-Series Winch-Up Masts (AP-RM-RH360)
1	GRP Flooring for APAC Single-Axle Alloy Modular Trailers, Factory Installation (AP-AMT-GFLSA)
1	Solar Frame for AMT Platform, 2x 305 W Panel, Fixed (AP-AMT-SF2P)
1	Enclosure Bracket for AMT Platform, 1000x800x400 Enclosure (AP-AMT-EB1008040)

Australian designed and manufactured infrastructure for public safety and first response, built on the Sunshine Coast, Queensland. Need a variation on this design? Our team can engineer it to suit your site.

Contact us

Phone	1300 952 788
Email	sales@apacinfrastructure.com.au
Web	apacinfrastructure.com.au
ABN	43 615 637 235

Specifications, dimensions and weights are nominal, correct at the date of issue and subject to change without notice. Images are for illustration and may show optional equipment. Confirm suitability for your site, including wind region and mounting surface, with APAC before ordering, and install in accordance with APAC's instructions and the relevant Australian Standards.

Issued 25 November 2026. For the latest version of this datasheet, visit https://apacinfrastructure.com.au/product-catalogue/trailers/amt-single-axle-alloy-modular-trailer-2-panel-solar-8m-electric-winch?v=561

© 2026 APAC Infrastructure Pty Ltd. All rights reserved.