APAC Infrastructure Pty Ltd
ABN: 43 615 637 235
1300 952 788
sales@apacinfrastructure.com.au

AL800 Aluminium Lattice Tower, Free-Standing - 6.2m

AP-AL800-6.2



Key Features

- High strength-to-weight ratio
- 800 mm wide body
- 3100 mm modular lengths
- 3.1 to 12.4 m tower heights

Overview

APAC's AL800 modular free-standing aluminium lattice towers are manufactured locally in Queensland in 3.1 metre modules, permitting comfortable handling during transport and assembly. AL800 Modular Tower System (MTS) is a true-stackable design which can be used to build cost effective towers up to 12.4 metres (four sections), and of course much higher with guy-wire/supports.

The tower has a proven engineered design, demonstrating ability to handle headloads equivalent to a 0.9 m diameter microwave dish in region B1/B2 at 9.3m height. We can assess your planned equipment and location to develop an engineered solution if required.

Ordinary free-standing galvanised towers have a tapered design, meaning final design height must be known well in advance of manufacturing, and each tower must be purchased as a single kit. AL800 towers are designed to be manufactured and shipped as identical modules, arranged to any height as needed.

The tower are ordinarily supplied in a bright acid finish, but can be supplied painted in aircraft colouring, or high visibility for mining applications.

APAC Infrastructure Pty Ltd
ABN: 43 615 637 235
1300 952 788
sales@apacinfrastructure.com.au

Specification

Parameter	AP-AL800-6.2
Physical Specifications	
System	**AL800**
Subtype	**Erexures**
Height (Nominal)	**6.2 m**
Materials	**Aluminium**
Material Finish	**Bright/Pickled Finish**
Installation	**Platform / Substructure**
Mounting	**AL800 Bolt Pattern**
Interfaces	
Installation / Attachment	
Payload Interfaces	

Installation / Attachment

Quantity	Mounting	Notes
1	AL800 Bolt Pattern	Attaches to AL800 compatible base plates or anchor bolts

Payload Interfaces

Quantity	Interfaces	Notes
1	AL800 Bolt Pattern	For attaching additional AL800 series modules/headframes
3	Pole 76 mm ⌀	For attaching ordinary equipment

Subcomponents

Quantity	Bundled Components
2	AL800 Aluminium Modular Lattice Tower - 3.1m Section (AP-AL800-LM)
12	Tap Bolt, Hot-Dip Galvanised 8.8 - M16 Standard Thread (AP-FST-TPB-HDM16)
12	Hex Nut, Hot-Dip Galvanised Class 8 - M16 Standard Thread (AP-FST-HXN-HDM16)
24	Flat Washer, Hot-Dip Galvanised Class 8 - M16 (AP-FST-FW-HDM16)

APAC Infrastructure Pty Ltd
ABN: 43 615 637 235
1300 952 788
sales@apacinfrastructure.com.au

Drawing

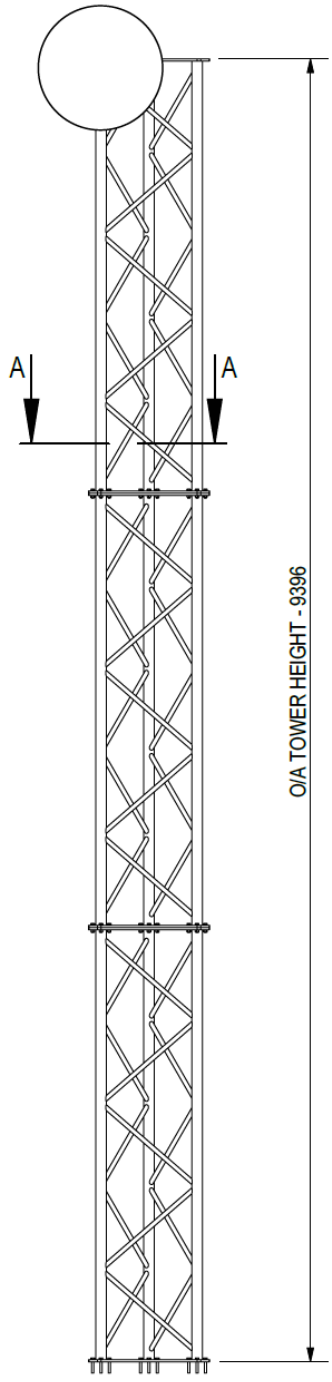

FRONT VIEW

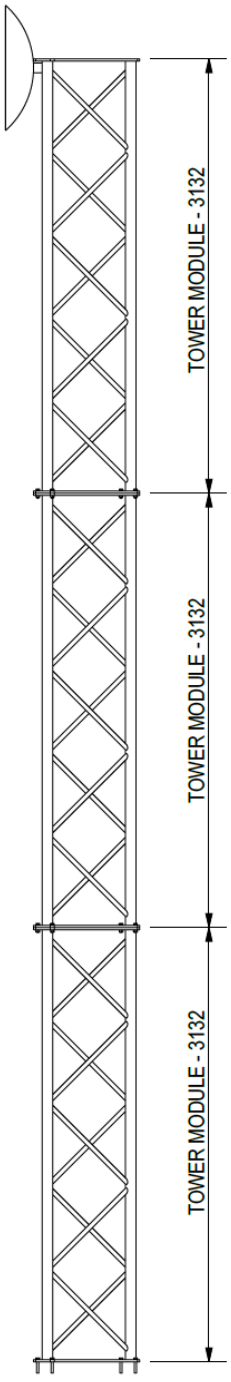

SIDE VIEW

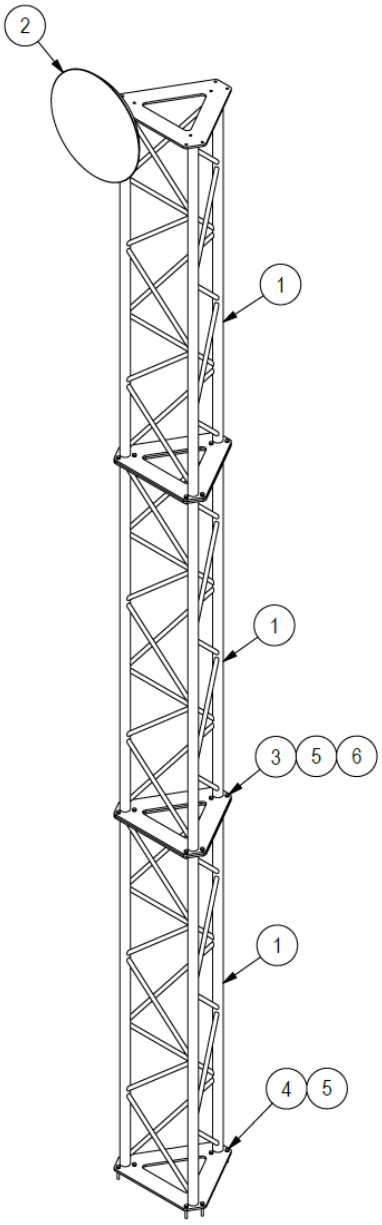

ISOMETRIC VIEW

Variants

AL800 Aluminium Lattice Tower, Free-Standing - 6.2m AP-AL800-6.2 · this datasheet	
AL800 Aluminium Lattice Tower, Free-Standing - 9.3m AP-AL800-9.3	
AL800 Aluminium Lattice Tower, Free-Standing - 12.4m AP-AL800-12.4	

Australian designed and manufactured infrastructure for public safety and first response, built on the Sunshine Coast, Queensland. Need a variation on this design? Our team can engineer it to suit your site.

Contact us

Phone	1300 952 788
Email	sales@apacinfrastructure.com.au
Web	apacinfrastructure.com.au
ABN	43 615 637 235

Specifications, dimensions and weights are nominal, correct at the date of issue and subject to change without notice. Images are for illustration and may show optional equipment. Confirm suitability for your site, including wind region and mounting surface, with APAC before ordering, and install in accordance with APAC's instructions and the relevant Australian Standards.

Issued 25 November 2026. For the latest version of this datasheet, visit https://apacinfrastructure.com.au/product-catalogue/mounting-structures/al800-aluminium-lattice-tower-free-standing-124m?v=540

© 2026 APAC Infrastructure Pty Ltd. All rights reserved.