APAC Infrastructure Pty Ltd
ABN: 43 615 637 235
1300 952 788
sales@apacinfrastructure.com.au

Turnbuckle with D-Shackles - Galvanised, M12

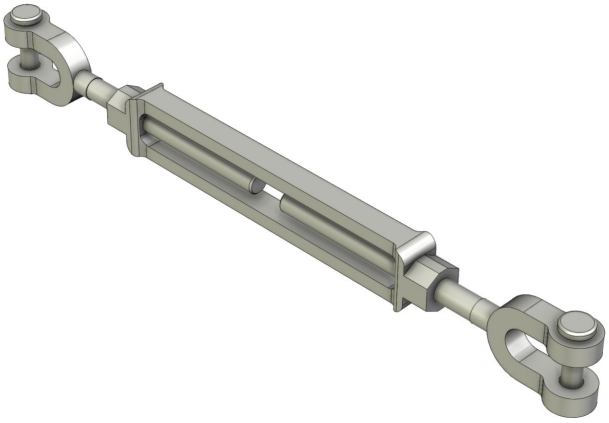

AP-FST-TBDS-12

Key Features

- Galvanised or Stainless

Overview

A turnbuckle with D-Shackle style endings on each end is a device used for adjusting the tension or length of wire ropes. It features a threaded body with D-Shackle fittings that allow secure attachment to the ends of the wire rope, facilitating easy tension adjustment for stability and support. Each D-Shackle has a split pin for securing.

Style varies between stainless and galvanised steel models.

This component is typically found as a subcomponent within APAC guy wire kits.

APAC Infrastructure Pty Ltd
ABN: 43 615 637 235
1300 952 788
sales@apacinfrastructure.com.au

Specification

Parameter	AP-FST-TBDS-12
Physical Specifications	
Subtype	**Turnbuckles**
Size	**M12**
Materials	**Steel**
Material Finish	**Hot-Dip Galvanised**

Variants

Turnbuckle with D-Shackles - Galvanised, M12	AP-FST-TBDS-12 · this datasheet
Turnbuckle with D-Shackles - Stainless Steel, M12	AP-FSS-TBDS-12

Australian designed and manufactured infrastructure for public safety and first response, built on the Sunshine Coast, Queensland. Need a variation on this design? Our team can engineer it to suit your site.

Contact us

Phone	1300 952 788
Email	sales@apacinfrastructure.com.au
Web	apacinfrastructure.com.au
ABN	43 615 637 235

Specifications, dimensions and weights are nominal, correct at the date of issue and subject to change without notice. Images are for illustration and may show optional equipment. Confirm suitability for your site, including wind region and mounting surface, with APAC before ordering, and install in accordance with APAC's instructions and the relevant Australian Standards.

Issued 25 November 2026. For the latest version of this datasheet, visit https://apacinfrastructure.com.au/product-catalogue/fixings/turnbuckle-d-shackles?v=451

© 2026 APAC Infrastructure Pty Ltd. All rights reserved.