APAC Infrastructure Pty Ltd
ABN: 43 615 637 235
1300 952 788
sales@apacinfrastructure.com.au

AMT Dual-Axle Alloy Modular Trailer, Base Chassis

AP-AMT-DA

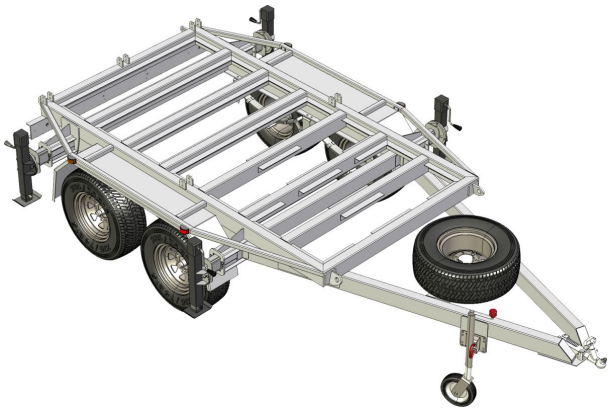

Key Features

- Dual-Axle Trailer
- 1.5 Tonne Outrigger Jacking Legs
- Structural-Grade Aluminium Construction
- Alloy Modular Technologies Base Platform

Overview

The Dual-Axle Alloy Trailer is part of our AMT Platform, a mounting system built from interchangeable modules that allows simple reconfiguration and redeployment.

This is a Trailer Base Chassis, which can be thought of as the base building block from which other modules and subsystems are attached. It is a Dual-Axle Trailer, which provides a longer deck measuring 3.0 metres in length, but maintaining the same 1.6 metre deck width as the Single-Axle Trailer.

100% manufactured in Sunshine Coast, Queensland, using heavy gauge medium-structural grade aluminium.

APAC Infrastructure Pty Ltd
ABN: 43 615 637 235
1300 952 788
sales@apacinfrastructure.com.au

Specification

Parameter	AP-AMT-DA
Physical Specifications	
No. Axles	**2**
Running Clearance	**600 mm**
Deck Height	**850 mm**
Materials	**Aluminium**
Material Finish	**Bright/Pickled Finish**
Outriggers	**1500 kg Levelling Jacks**
Braking System	**Mechanical Brakes**
Trailer Connector	**7-Pin Flat**
Trailer Coupling	**50 mm Ball Hitch**
Suspension	**Leaf Spring**
Weight	**533 kg**
Dimensions	**4,876 × 2,500 × 990 mm**
Interfaces	
Available Interfaces	

Quantity	Interfaces
8	APAC AMT Cross Member
1	APAC AMT Flooring Attachment

Subcomponents

Quantity	Item
4	Levelling Jack, 1500 kg Rated
2	Mechanical Drum Axle 6-Stud, 1400 kg Rated
5	16 x 8 x 245 Landcruiser 0 Offset Rims
5	245/75 R16 Light Truck Tyres, incl. 1x Spare Tyre
1	Heavy Duty Safety Chain Kit, 10 mm Chain, 2500 kg Rated
1	10" Solid Rubber Swivel Jockey Wheel, Heavy Duty Brackets
4	Eye-to-Eye Leaf Spring Suspension, 1500 kg rated
1	50 mm Ball Plunger Coupling, 3500 kg Rated

Australian designed and manufactured infrastructure for public safety and first response, built on the Sunshine Coast, Queensland. Need a variation on this design? Our team can engineer it to suit your site.

Contact us

Phone	1300 952 788
Email	sales@apacinfrastructure.com.au
Web	apacinfrastructure.com.au
ABN	43 615 637 235

Specifications, dimensions and weights are nominal, correct at the date of issue and subject to change without notice. Images are for illustration and may show optional equipment. Confirm suitability for your site, including wind region and mounting surface, with APAC before ordering, and install in accordance with APAC's instructions and the relevant Australian Standards.

Issued 25 November 2026. For the latest version of this datasheet, visit https://apacinfrastructure.com.au/product-catalogue/trailers/amt-dual-axle-alloy-modular-trailer-base-chassis?v=435

© 2026 APAC Infrastructure Pty Ltd. All rights reserved.